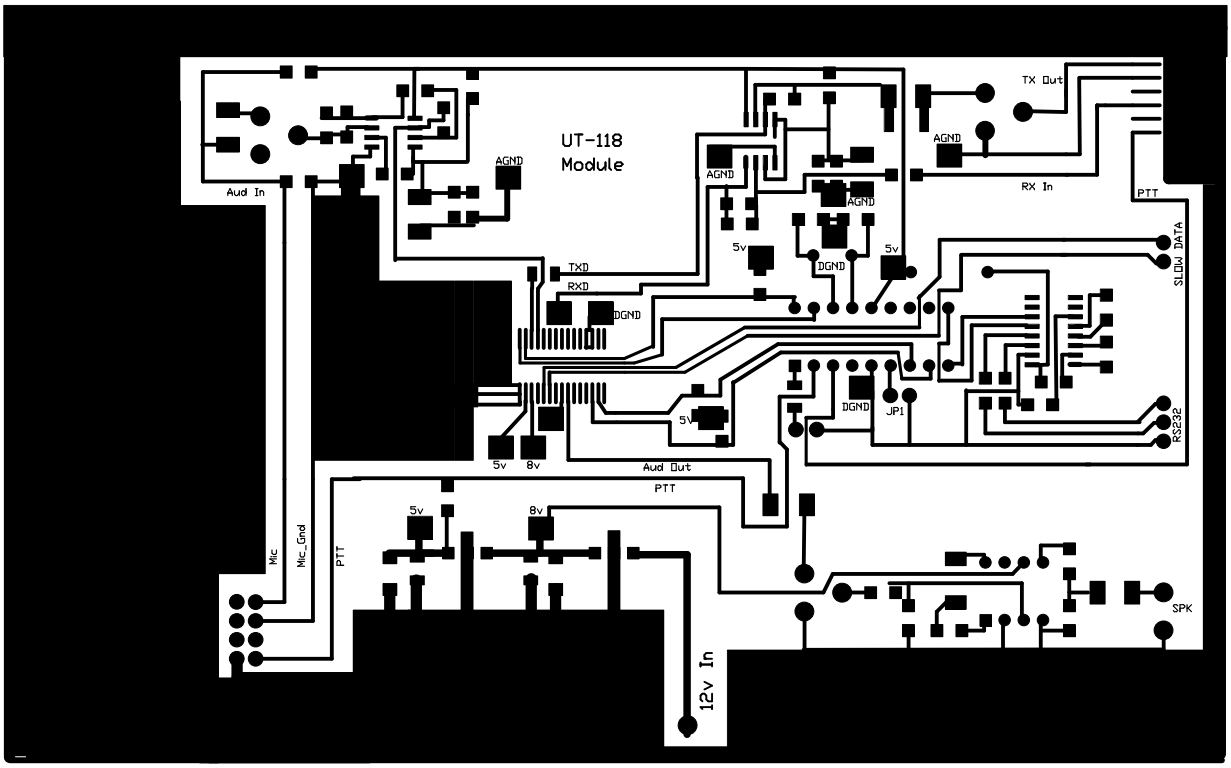
UT-118
Module
Aud In
AGND
TXD
RXD
DGND
5v
8v
Aud Out
PTT
Mic
Mic_Gnd
12v In
TX Out
RX In
SLOW DATA
RS232
JP1
SPK